Abloy Oy Wahlforssinkatu 20 P.O. Box 108 FI-80101 Joensuu, Finland | Tel. +358 20 599 2501 | abloy.com

ABLOY® EL420

High security DIN standard motor lock for narrow profile doors

Product description
High security locks EL420 is used in environments where convenience, higher security, high durability or door automation is needed. The integrated monitoring contacts from the lock can be connected to the different systems.
Deadbolt is withdrawn inside the lockcase by motor and double action latch is released, when electrical control is on. Door is opened from outside by using door pull.
Also possible to connect with door automatics for full hands-free operation.
Inside handle opens lock mechanically (exit function), no need for electric control.
When door closes, dead bolt is thrown out automatically, double action latch is blocked and the lock case is secured on two points.

Overview of Advantages
- Motorized bolt traction for push&pull and door automatics use
- Day/night mode
- Electric anti-tampering: if deadbolt is thrown out when door is not closed, it is withdrawn automatically.
- Mechanical automatic deadlocking
- Reversible handing, left/right
- Burglary-resistant, due to dead bolt with 20 mm throw
- Exit function from inside handle
- Suitable for fire-rated doors
- Mechanical override with cylinder
- Back-up function: If deadbolt is withdrawn by motor, when power is down, deadbolt is driven out immediately (closed door) or allowed to come out (when door is closed).
- Monitoring functions
    - Door status
    - Handle down
    - Bolt deadlocked
    - Bolt in
    - Key cylinder used
    - Sabotage loop

Scope of delivery
- 1 pc lock case
- 1 pcs control unit EA420
- Operating manual

Ordered separately
- Strike plate (e.g. EA324)
- Cable EA218 (6m) / EA219 (10m)
- Lead cover EA280/281
- Handle/pull set (e.g. EH070)
- Cylinder (e.g. CY321T)

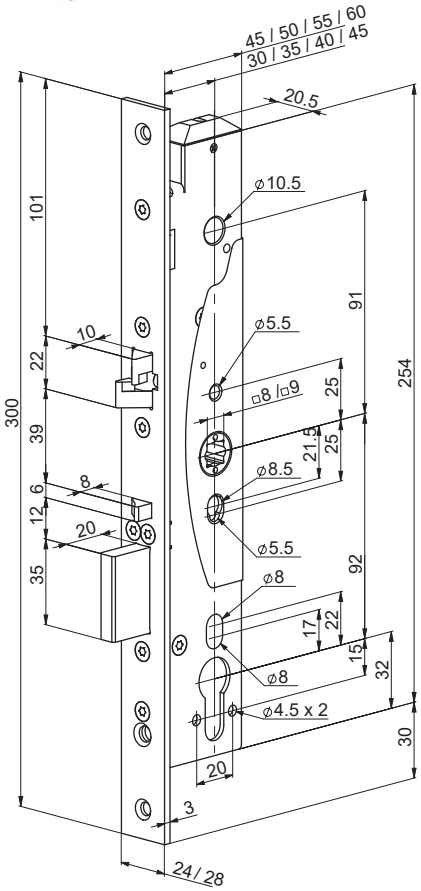

Technical data

Handing	Reversible handing, lef/right
Exit function	Yes
Mechanical cylinder override	Yes
Latch	Double action latch
Dead bolt	Yes, 20mm
Input operating voltage	12-24 VDC 12-18 VAC
Rated current consumption	12 VDC idle 80mA, normal drive 450mA, max. 1300mA 24 VDC idle 40mA, normal drive 220mA, max. 600mA
Relay capacity (monitoring contacts)	Max. 0.8 A 30 V AC/DC resist. 20 W
Suitable for fire doors	Yes
EN14846:2008	3S8C- L611
EN179:2008	376B1342AB
EN1125:2008	376B1321AB

This content is protected by Intellectual Property Rights Laws. The title to the content shall not pass to you, and instead shall remain with Abloy Oy or a third party holding the title. Abloy develops continuously the products and solutions offered. Therefore, the information contained in the document is subject to change without notice. ABLOY PROVIDES THIS CONTENT ON AN "AS IS" BASIS WITHOUT ANY WARRANTIES OF ANY KIND, EXPRESS, IMPLIED, OR STATUTORY."

ABLOY