Abloy Oy Wahlforssinkatu 20 P.O. Box 108 FI-80101 Joensuu, Finland | Tel. +358 20 599 2501 | abloy.com

ABLOY® EL160

DIN standard mechanical lock for wooden and metal doors

Product description
EL160 is a mechanical lock with same fitting as Europrofile Electric lock range.
EL160 is meant to be used on solid steel or timber doors.

Overview of Advantages
- Mechanical automatic dead locking system
- Changeable handing, installer can change setting during installation
- Exit function from inside by handle or panic bar
- Suitable for fire-rated doors
- Override function for unlocking with key from outside
- 8 / 9 mm spindle

Scope of delivery
- 1 pc lock
- 1 pc accessory set (fixing screws and spindle adapters 9/8)
- 1 operating manual

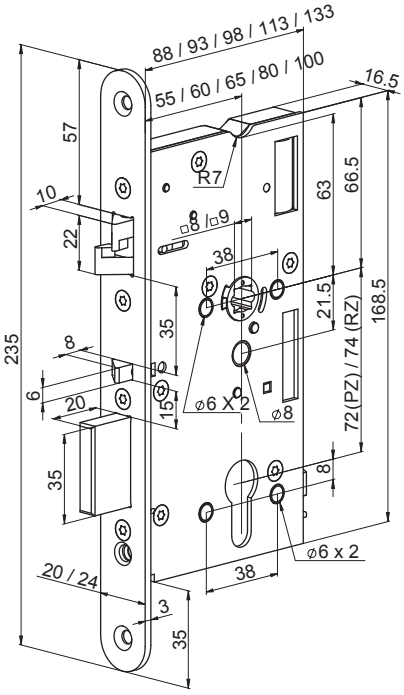

Technical data

Handing	Right, changeable to left
Panic function	Yes
Backset available	55mm/60mm/65mm/80mm/100mm
Face plate width	24mm/20mm
Follower	9/8mm
Distance	72mm
Suitable for fire-rated doors	Yes
Strength	EN 14846, Grade 6
Approval EN 14846 Certificate of Constancy of performance	0809 - CPR – 20002737
Approval EN 179 Certificate of Constancy of performance	0432-CPR-00008-01
Approval DIN 1125 Certificate of Constancy of performance	0432-CPR-00008-02

This content is protected by Intellectual Property Rights Laws. The title to the content shall not pass to you, and instead shall remain with Abloy Oy or a third party holding the title. Abloy develops continuously the products and solutions offered. Therefore, the information contained in the document is subject to change without notice. ABLOY PROVIDES THIS CONTENT ON AN "AS IS" BASIS WITHOUT ANY WARRANTIES OF ANY KIND, EXPRESS, IMPLIED, OR STATUTORY."