Angled strike plate - - - - - - - 32440- 0#

Left handed shown in diagram - Right handed is the reverse

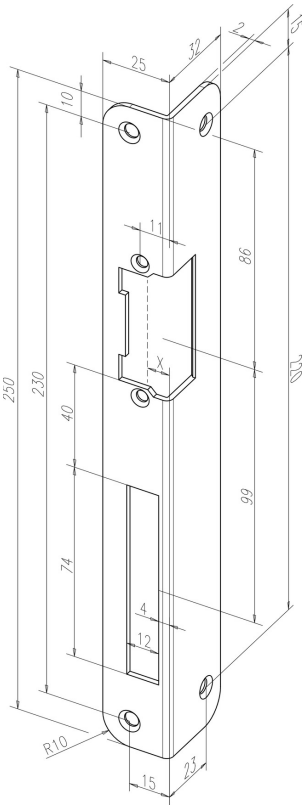

Left handed shown in diagram - Right handed is the reverse

Product description

Angled striking plate with latch bolt aperture and dead bolt cutout.

Overview of Advantages

- 2 mm material thickness
- For conventional effeff standard electric strike models, except for ProFix® variants

Technical data

Length	250 mm
Width	25 mm
Thickness	2 mm
Depth	32 mm
Dead bolt cutout	Yes
Latch bolt guide	No
Color	40
Color	Smoothed, galvanised

Variants that can be ordered

Order number	Description
-------32440-04	250 x 25/32 x 2 mm, ground and galvanised, DIN L
-------32440-05	250 x 25/32 x 2 mm, ground and galvanised, DIN R

ASSA ABLOY Sicherheitstechnik GmbH
Bildstockstraße 20 72458 Albstadt albstadt@assaabloy.com
Tel. + 497431 123-0 / www.effeff.de